Thin-Line LED Down Light Gen III

DIMMABLE

8", 15 watts Thin-line LED Down Light. Designed for remodel and new construction, wet locations listed, Thin Line Downlights are a versatile and affordable choice for countless applications.

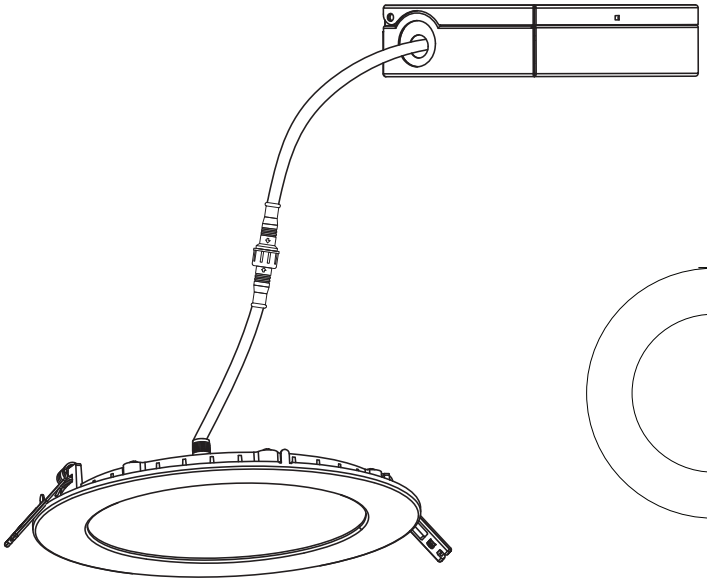

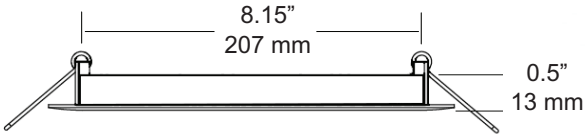

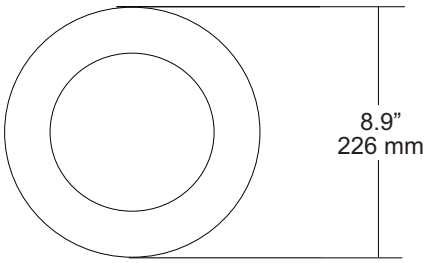

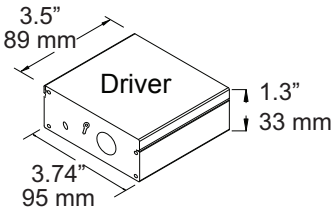

Features

- Energy Star rated - up to 80% energy savings
- Dimmable to 5% with most standard dimmers
- 120° beam spread
- Warm White and Neutral White color temperatures
- Two spring loaded clips to attach to any ceiling material
- White finish (interchangeable brushed nickel, black, bronze trims available - sold separately
- Wet locations listed
- No IC can required, for direct contact with insulation and combustible materials
- Temperature rating: -20ºC-45ºC
- Connects directly to 120V power supply
- Optional 277V Step-Down Transformer (non-dimmable)
- 50,000 hour life
- 5 year limited warranty
- Airtight
- cETLus and Energy Star listed

Specifications

LED Color	White
CCT	WW (3000K) NW (4000K)
Input Voltage	100 - 120 V, 60 Hz
Output Power(W)	15 Watts
No. SMD2835 LEDs	96
Lumen (lm)	1050 lm
CRI	>80
Luminous Efficacy (lm/W)	70 lm/w
Approved Location	Wet
Life Span	> 50,000 hrs
Appearance Size	8.9" W x 0.5" D (226mm W x 13mm D)
Installation Hole Size	8.27" (210mm)

Ordering Code:

LVLDL-08-XX-WH-R-L3

Project		Type	
Date		Contact	
Notes			

National Specialty Lighting
www.nslusa.com
303-926-1100
800-527-2923
800-527-4358
nslsales@nslusa.com

Thin-Line LED Down Light Gen III

DIMMABLE

8", 15 watts Thin-line LED Down Light. Designed for remodel and new construction, wet locations listed, Thin Line Downlights are a versatile and affordable choice for countless applications.

LVLDL-CP-8-L3

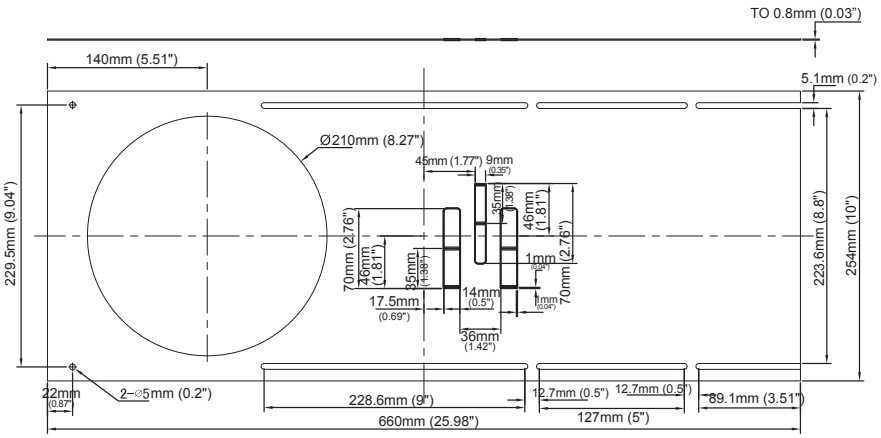

Compatible dimmers

Dimmable to 5% with most standard dimmers

Lutron	C.L™ Dimmers
	DVELV-300
	SELV-3600P
	NTELV-300/600
	MAELV-300/600
	MRF2-6ND-120
Leviton	VPE04
	6615
	VPE06
	VRE06
	6672
	6674
	IPE04

277V

DLT-277 (non-dimmable)

Approx. Dimensions
- 0.47" threads above 0.13" shoulder
- Nipple Dia. 0.82" (1/2" NPT)

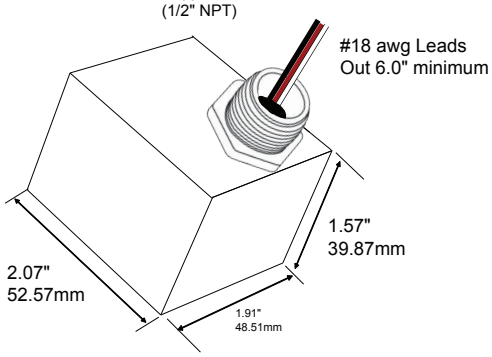

277V Specifications

Primary / Input	277V, 60Hz, 28W, 0.08A @ Full / Rated Load.
Secondary / Output	- Open Circuit = 130V ±2%, 0.4W - Full / Rated Load = 115V ±2%, 25VA (25W/ 0.22A resistive load)
Dielectric Strength	Winding to core 3000V, 60Hz, 1 sec.
Efficiency	88% typ. @ 277Vin, 25VA load.
Insulation System	Class A (105°C)
Environmental Temperature Rating	-20°C to + 40°C
MTBF (based on MIL Handbook 217F)	50 years @ rated specification.
Housing	Black Zytel FR50 (plastic)
Approvals	UL Listed to CSA C22.2 No. 66.1, 66.2 and UL5085-1, UL5085-2
Weight	0.75lbs.

www.nslusa.com
303-926-1100
800-527-2923
800-527-4358
nslsales@nslusa.com